DATE	DESCRIPTION	REV.

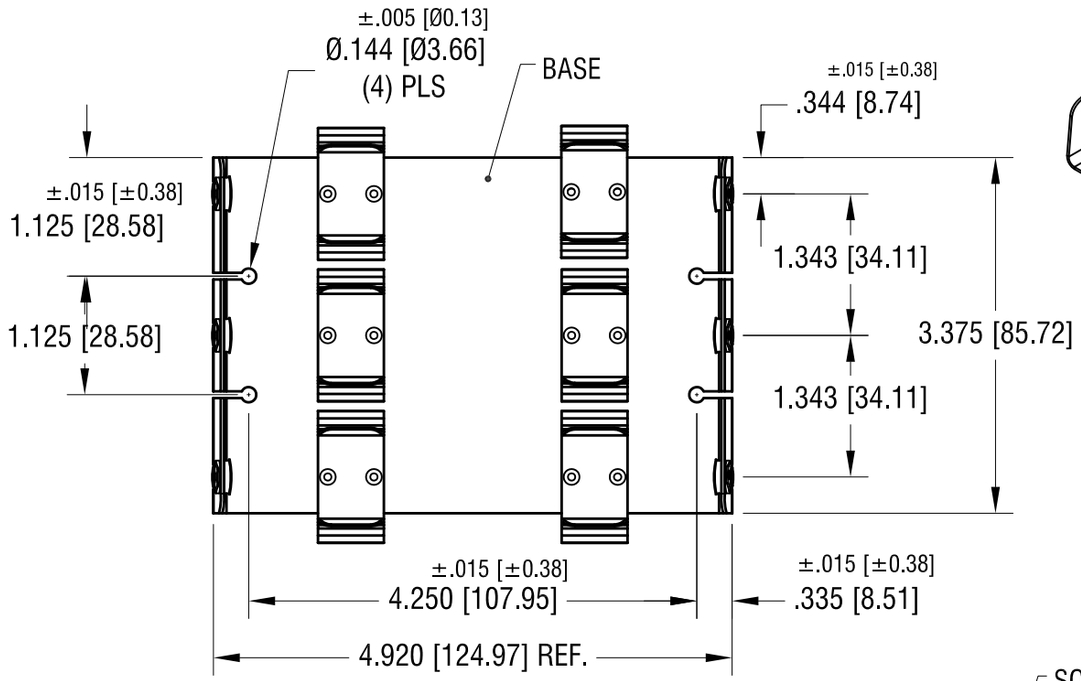

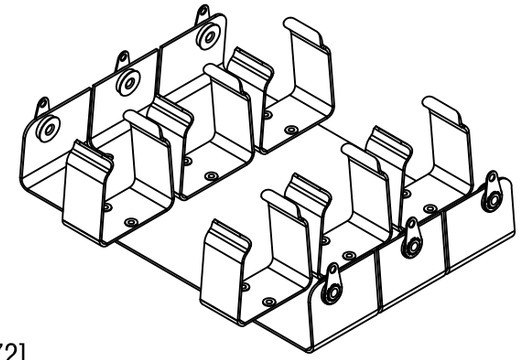

ISOMETRIC VIEW
SCALE: .8X

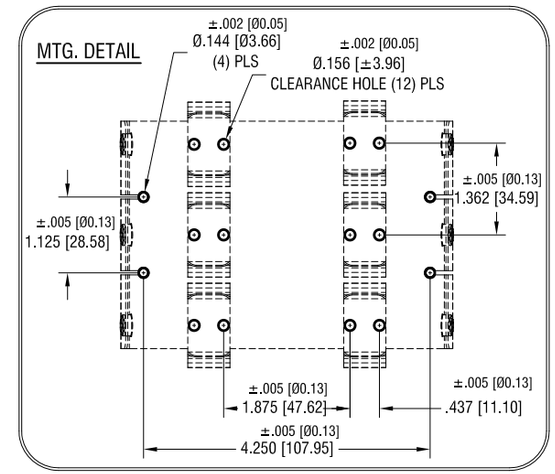

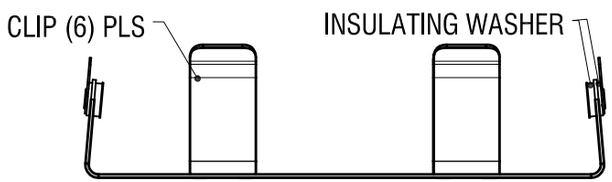

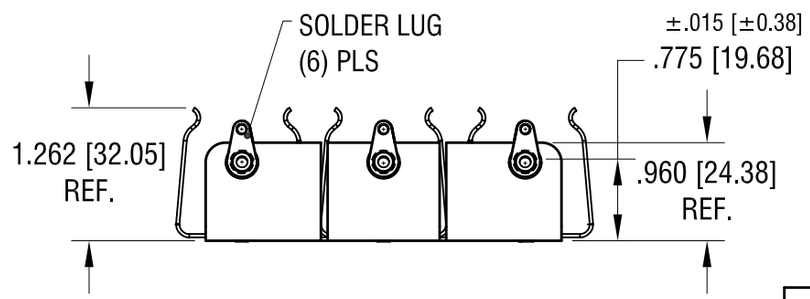

NOTES:
1. BASE: MAT'L - .032 [.81] TH'K ALUMINUM
2. CLIP: MAT'L - .032 [.81] TH'K ALUMINUM
3. SOLDER LUG: MAT'L - BRASS
FINISH - TIN PLATE

THIS DOCUMENT IS THE PROPERTY OF KEYSTONE ELECTRONICS CORP. AND SHALL NOT BE REPRODUCED, DISTRIBUTED OR USED AS A BASIS FOR MANUFACTURE WITHOUT PRIOR WRITTEN PERMISSION FROM KEYSTONE ELECTRONICS CORP.

KEYSTONE ELECTRONICS CORP.
www.keyelco.com • NEW HYDE PARK, NY 11040 • Tel (516) 328-7500

PART NAME	BATTERY HOLDER (6)'D' CELLS		
MATERIAL	AS NOTED		
FINISH	AS NOTED	DRN BY BOONE	DATE 5.03.07
		APP'D MR	SCALE .6X
TOLERANCES INCH [MM] DECIMAL ± .010 [± 0.25] ANGULAR ± 1° UNLESS OTHERWISE SPECIFIED	CODE C	DWG NO. 201	